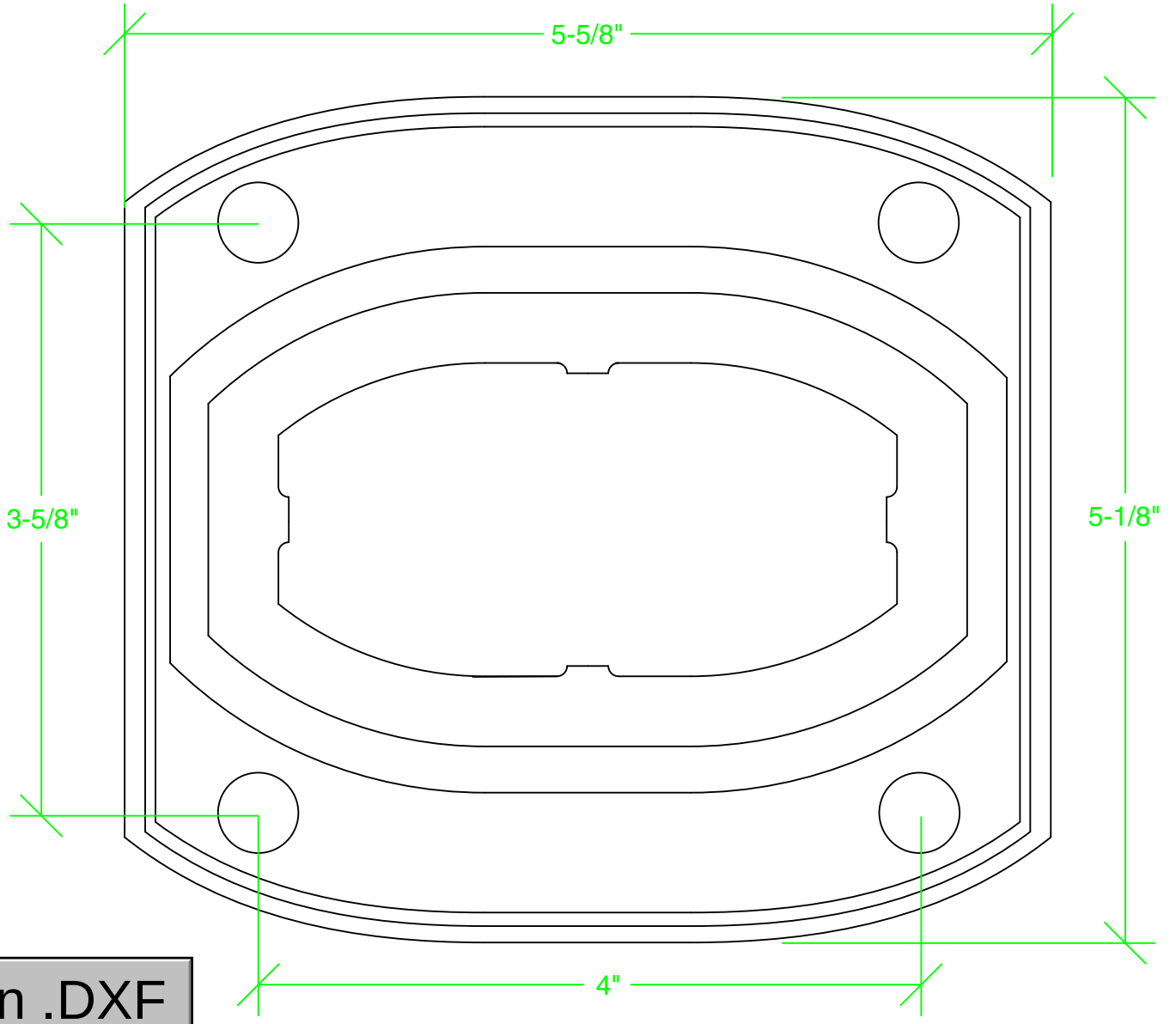


Open .DXF
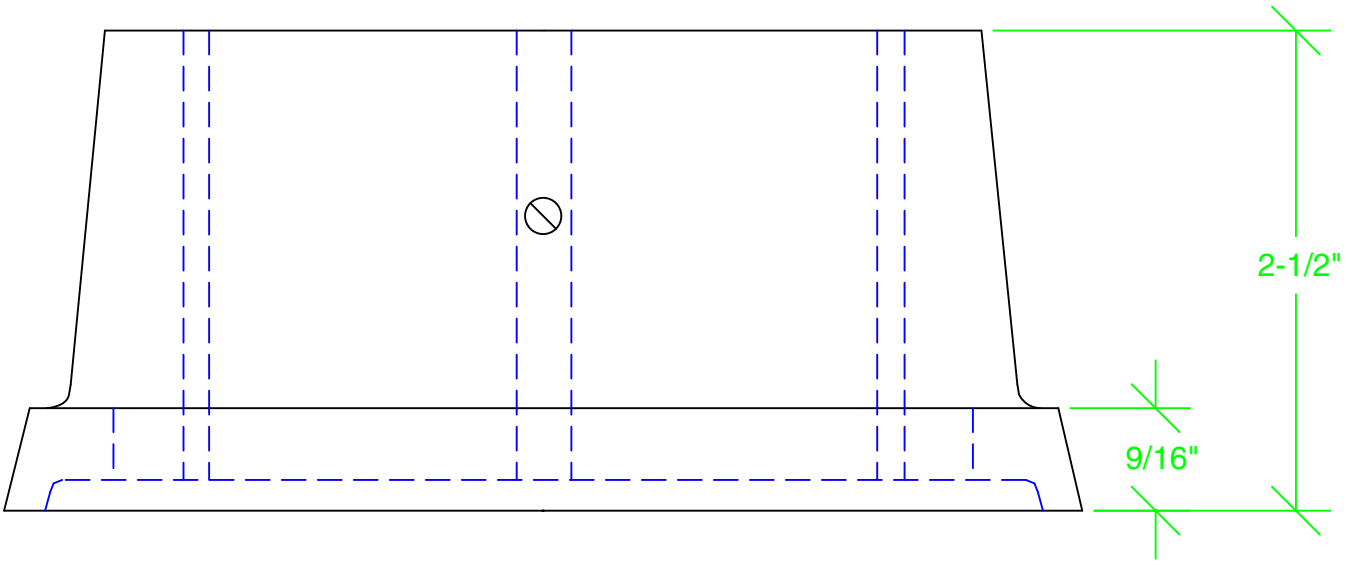
Open .DWG