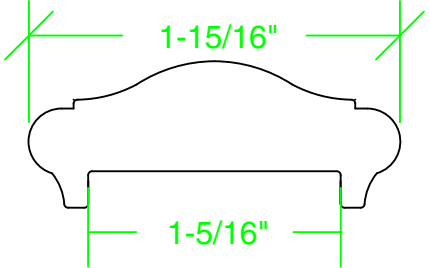

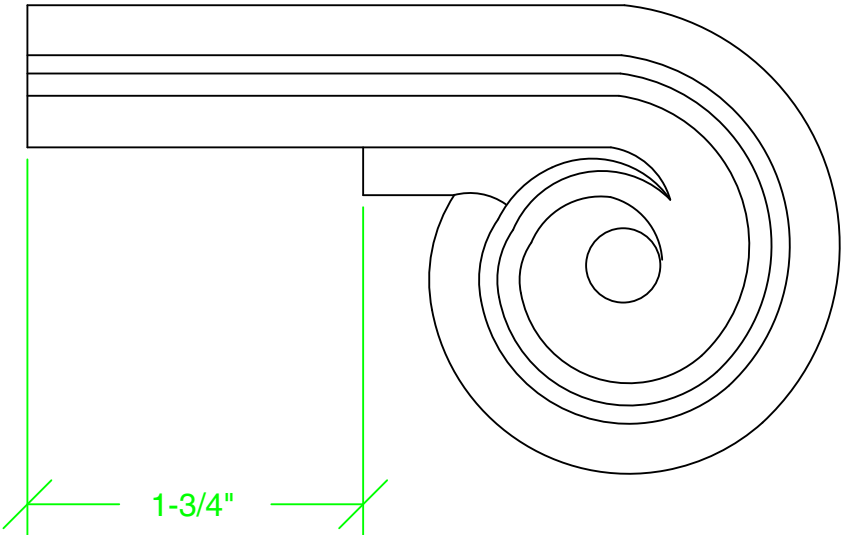

Open .DXF

Open .DWG