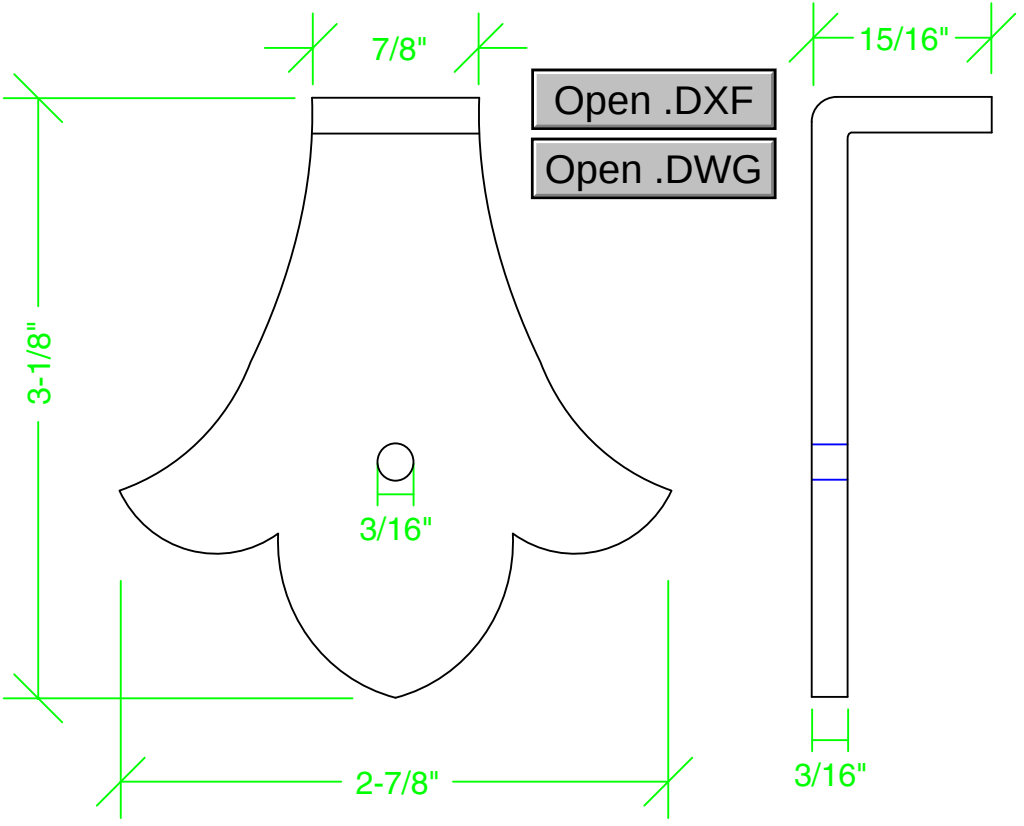
7/8"
15/16"
Open .DXF
Open .DWG
3-1/8"
3/16"
2-7/8"
3/16"