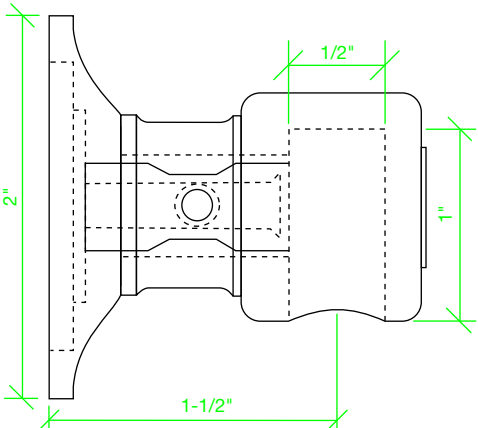
1/2"
2"
1"
1-1/2"

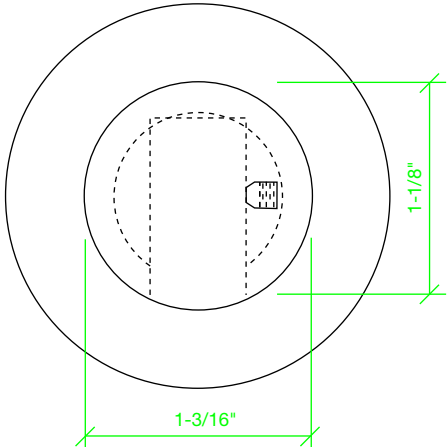
1-1/8"
1-3/16"